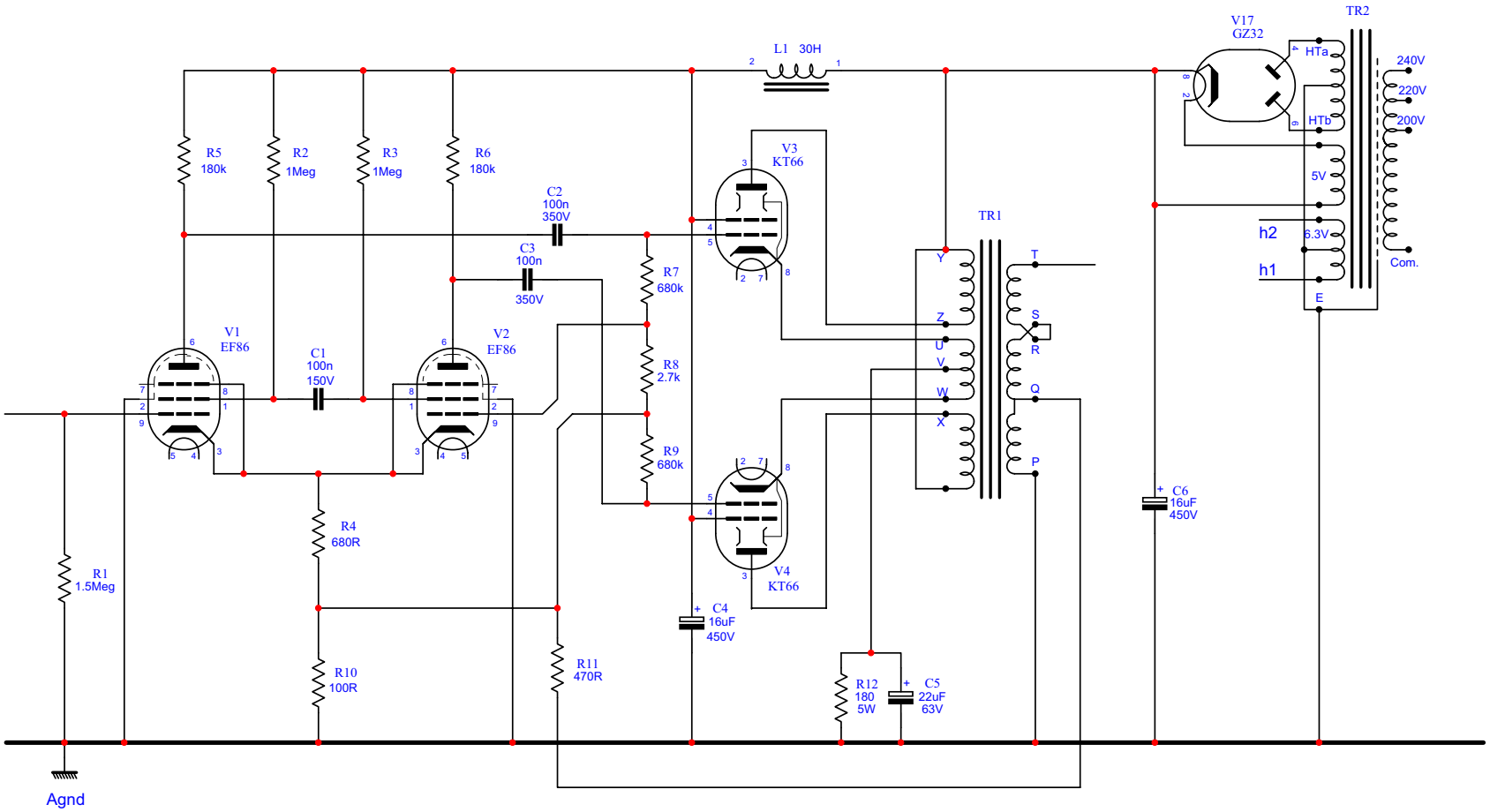

Revision: 1	d.c. ~ daylight ltd.	Page Size: A4	d.c. ~ daylight ltd.
QUAD II (for spice analysis)			5 Greenacre Drive Pontprennau Cardiff CF23 8PA
4 Jan 2003	Drawn: K. Snook	Checked:	Page 1 of 1

Tel: +44 29 20 657149
Fax: +44 29 20 657151