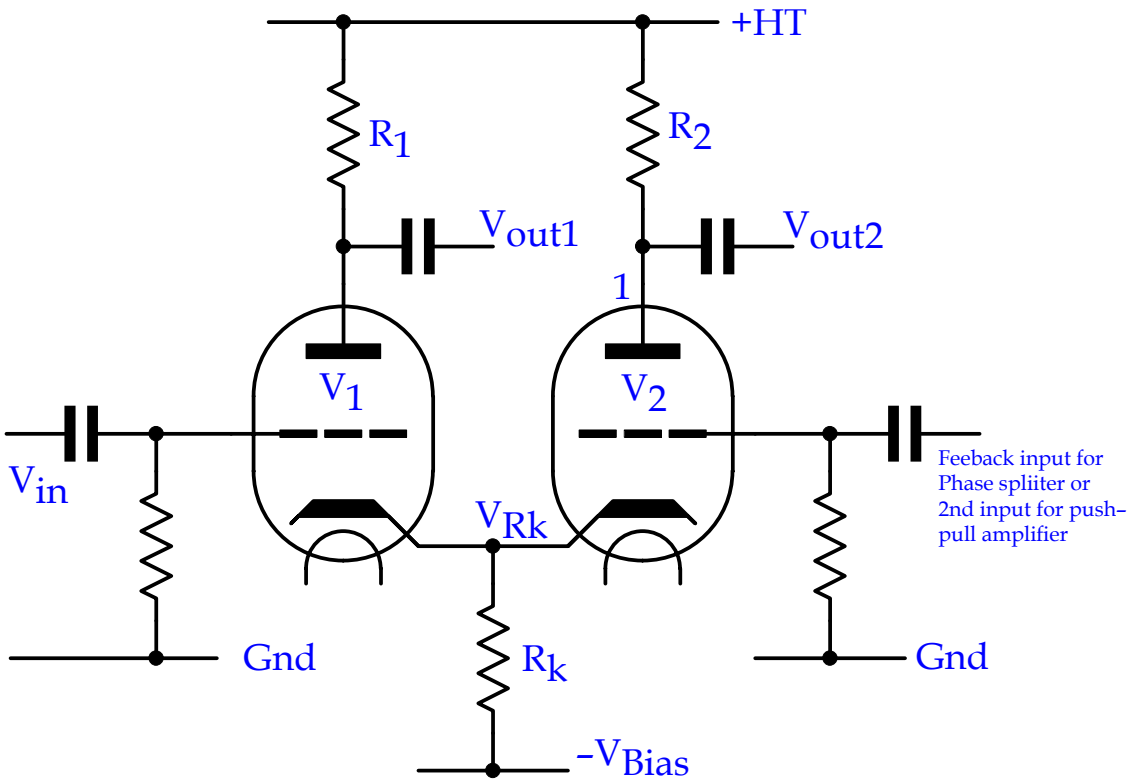
+HT
R1
R2
Vout1
Vout2
1
V1
V2
Vin
VRk
Feeback input for
Phase spliiter or
2nd input for push-
pull amplifier
Gnd
Rk
Gnd
-VBias