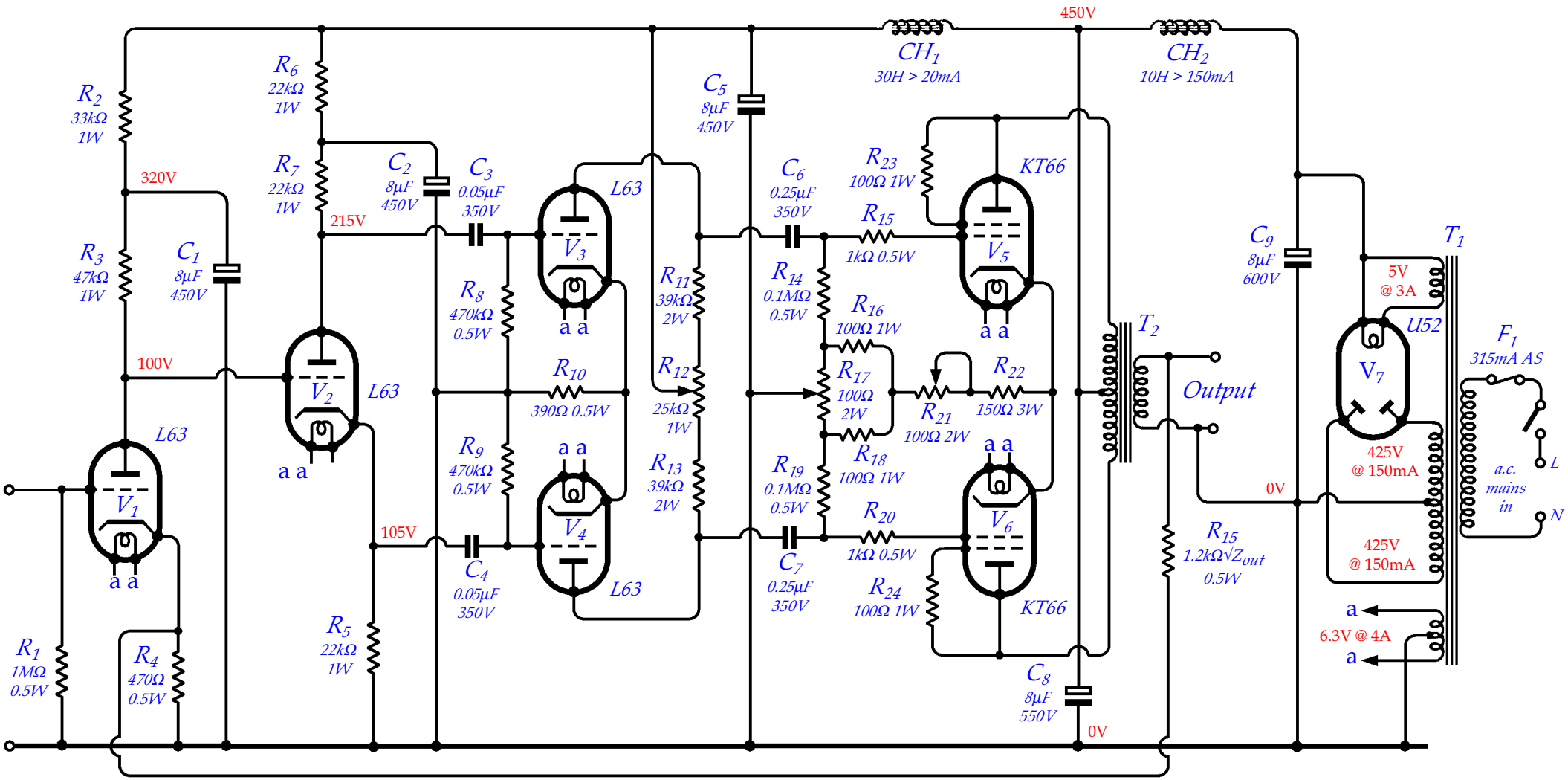

Design for a high Quality Amplifer
" The Williamson Amplifier "
from Wireless World May 1947 p. 161
Redrawn in original form by Keith Snook

d.c. ~ daylight ltd.