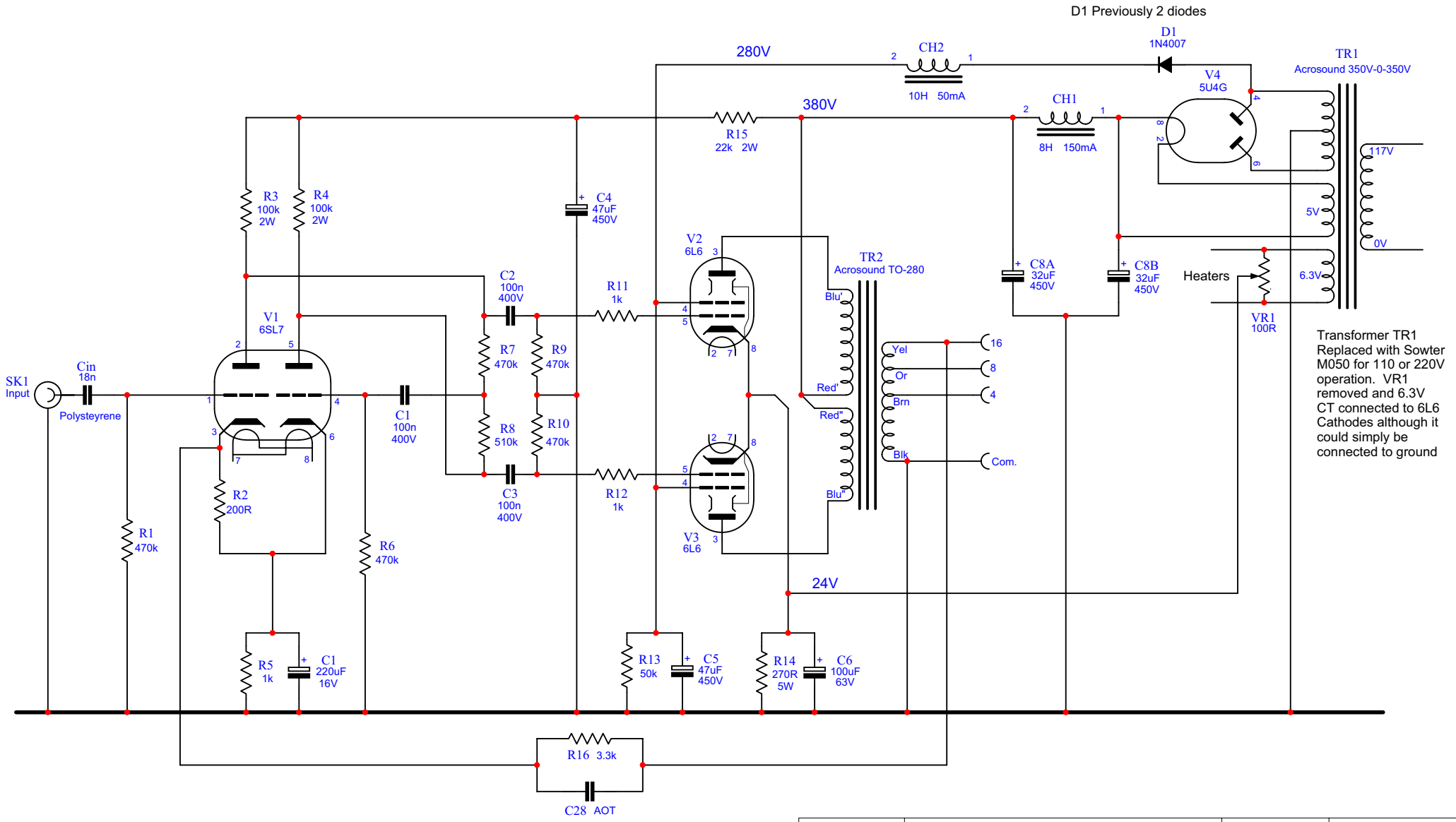

Revision: 1	d.c. ~ daylight ltd.	Page Size: A4	d.c. ~ daylight ltd.
Acrosound 6L6 Re-build			5 Greenacre Drive Pontprennau Cardiff CF23 8PA
4 Mar 2000	Drawn: K. Snook	Checked:	Page 1 of 1
			Tel: +44 29 20 657149 Fax: +44 29 20 657151